Installation Instructions

for Dryers

Original Instructions
Keep These Instructions for Future Reference.
CAUTION: Read the instructions before using the machine.
(If this machine changes ownership, this manual must accompany machine.)

Alliance™ Laundry Systems

www.speedqueen.com

Part No. D514320ENR5
November 2019

WARNING

WARNING

Risk of fire. Highly flammable material.

W881

Read all instructions before using unit.

WARNING

FOR YOUR SAFETY, the information in this manual must be followed to minimize the risk of fire or explosion or to prevent property damage, personal injury or death.

W033

WARNING

- **Do not store or use gasoline or other flammable vapors and liquids in the vicinity of this or any other appliance.**
- **WHAT TO DO IF YOU SMELL GAS:**
  - **Do not try to light any appliance.**
  - **Do not touch any electrical switch; do not use any phone in your building.**
  - **Clear the room, building or area of all occupants.**
  - **Immediately call your gas supplier from a neighbor's phone. Follow the gas supplier's instructions.**
  - **If you cannot reach your gas supplier, call the fire department.**
- **Installation and service must be performed by a qualified installer, service agency or the gas supplier.**

W052

IMPORTANT: Purchaser must consult the local gas supplier for suggested instructions to be followed if the dryer user smells gas. The gas utility instructions plus the SAFETY and WARNING note directly above must be posted in a prominent location near the dryer for customer use.

WARNING

- **Installation of unit must be performed by a qualified installer.**
- **Install clothes dryer according to manufacturer's instructions and local codes.**
- **DO NOT install a clothes dryer with flexible plastic venting materials. If flexible metal (foil type) duct is installed, it must be of a specific type identified by the appliance manufacturer as suitable for use with clothes dryers. Refer to section on connecting exhaust system. Flexible venting materials are known to collapse, be easily crushed, and trap lint. These conditions will obstruct clothes dryer airflow and increase the risk of fire.**

W729R1

WARNING

To reduce the risk of severe injury or death, follow all installation instructions. Save these instructions.

W894

WARNING

FOR YOUR SAFETY

Do not store or use gasoline or other flammable vapors and liquids in the vicinity of this or any other appliance.

W053

This product uses FreeRTOS V7.2.0 (www.freertos.org).

© Copyright, Alliance Laundry Systems LLC -
DO NOT COPY or TRANSMIT

The following information applies to the state of Massachusetts, USA.

- This appliance can only be installed by a Massachusetts licensed plumber or gas fitter.
- This appliance must be installed with a 36 inch [910 mm] long flexible gas connector.
- A “T-Handle” type gas shut-off valve must be installed in the gas supply line to this appliance.
- This appliance must not be installed in a bedroom or bathroom.

© Copyright, Alliance Laundry Systems LLC -
DO NOT COPY or TRANSMIT

Table of Contents

Dimensions **6**

Installation **8**
- Before You Start 8
  - Supplies 8
  - Parts Included 8
  - Order of Installation Steps 8
- Position and Level the Dryer 8
- Connect Dryer Exhaust System 11
  - Exhaust Direction 12
  - Exhaust System 12
- Gas Dryers - Connect Gas Supply Pipe 13
- Electric Dryer Only - Connect Electrical Plug 15
  - Earth/Ground Information 15
  - Connecting Power Cord with Three-Wire Plug 15
  - Connecting Power Cord with Four-Wire Plug 17
- Reverse Door, if Desired 18
- Wipe Out Inside of Dryer 20
- Plug In the Dryer 20
  - Electric Dryer 20
  - Gas Dryer 20
- Recheck Steps 21
- Check Heat Source 21
  - Electric Dryers 21
  - Gas Dryers 21

Installer Checklist **23**

© Copyright 2019, Alliance Laundry Systems LLC
All rights reserved. No part of the contents of this book may be reproduced or transmitted in any form or by any means without the expressed written consent of the publisher.

Dimensions

Electric Models

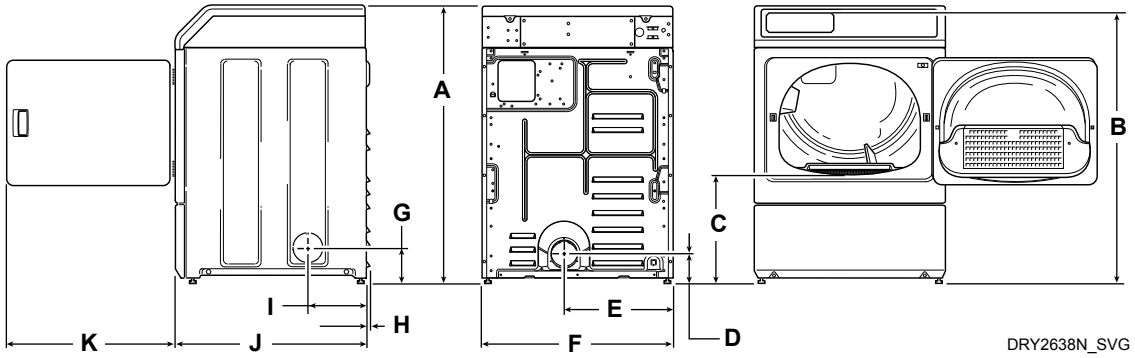

A	* 40.42 in. [1027 mm]
B	* 39.61 in. [1006 mm]
C	* 15.44 in. [392 mm]
D	* 4 in. [102 mm]
E	15.4 in. [391 mm]
F	26.875 in. [683 mm]
G	* 4.5 in. [114 mm]
H	0.4 in. [10 mm]
I	8 in. [203 mm]
J	28 in. [711 mm]
K	23.5 in. [597 mm]
NOTE: Exhaust openings are 4 inch [102 mm] metal ducting.	* With leveling legs turned into base.

© Copyright, Alliance Laundry Systems LLC -
DO NOT COPY or TRANSMIT

Gas Models

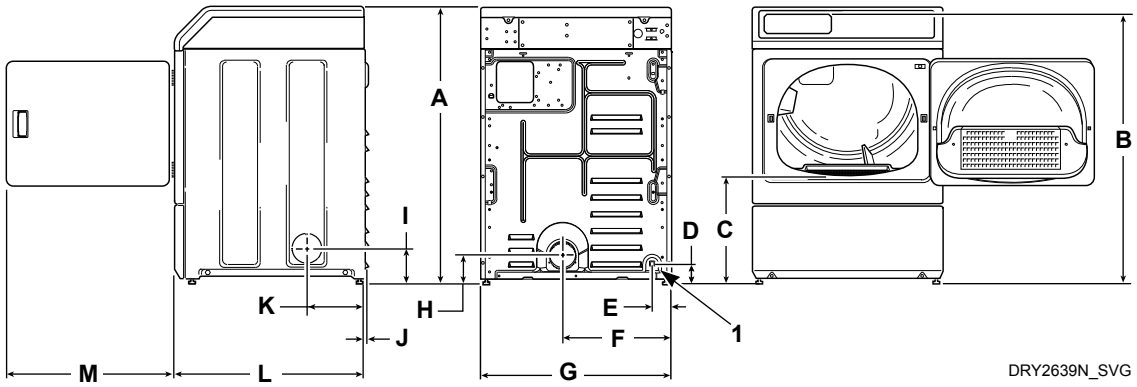

1. 3/8 in. NPT Gas Connection

A	*40.42 in. [1027 mm]
B	*39.61 in. [1006 mm]
C	*15.44 in. [392 mm]
D	*2.8 in. [70 mm]
E	2.3 in. [60 mm]
F	15.4 in. [391 mm]
G	26.875 in. [683 mm]
H	4 in. [102 mm]
I	*4.5 in. [114 mm]
J	0.4 in. [10 mm]
K	8 in. [203 mm]
L	28 in. [711 mm]
M	23.5 in. [597 mm]
NOTE: Exhaust openings are 4 inch [102 mm] metal ducting.	* With leveling legs turned into base.

NOTE: Gas models cannot be vented out left side of cabinet because of burner housing.

IMPORTANT: The dryer should have sufficient clearance around it for needed ventilation and for the ease of installation and servicing. For maximum drying performance, we recommend that more clearance be allowed around the dryer than the clearances that are listed throughout this manual.

© Copyright, Alliance Laundry Systems LLC - DO NOT COPY or TRANSMIT

Installation

Before You Start

Supplies

For most installations, the basic supplies you will need are:

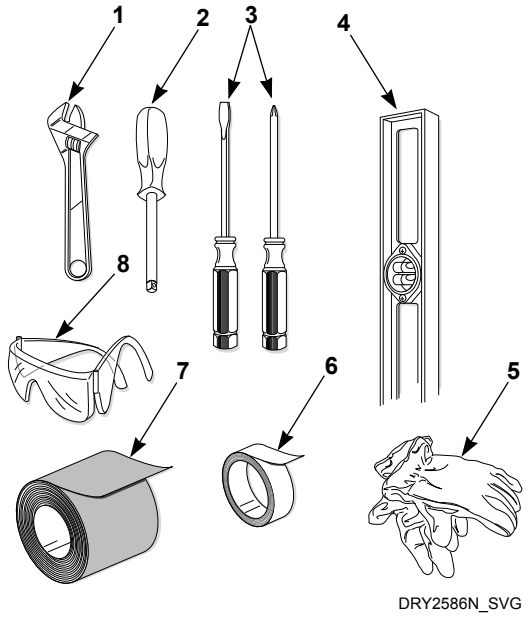

1. Wrench
2. 1/4 inch Driver
3. Screwdrivers
4. Level
5. Gloves
6. Teflon Tape
7. Duct Tape
8. Safety Glasses

Figure 1

NOTE: This appliance is suitable for use in countries having a warm, damp climate.

WARNING

Any disassembly requiring the use of tools must be performed by a suitably qualified service person.

W299

Parts Included

An accessories bag has been shipped inside your dryer. It includes:

- Product literature
- Dryer Rack Reply Card (Select Models Only)
- Three screws (electric dryers only). Refer to *Electric Dryer Only - Connect Electrical Plug*.

Order of Installation Steps

1. Position and level the dryer.
2. Connect dryer to exhaust system.
3. For gas models only, connect the gas supply pipe. Check for gas leaks.
4. For electric models only, connect the electrical cord.
5. Reverse the door, if desired.
6. Wipe out the inside of the dryer.
7. Plug in the dryer.
8. Recheck steps.
9. Start and run the dryer in a heat setting to verify dryer is heating.

Position and Level the Dryer

1. Install dryer before washer. This allows room for attaching exhaust duct.
2. Select a location with a solid floor. Dryers installed in residential garages must be elevated 18 inches [457 mm] above the floor.

No other fuel burning appliance should be installed in the same closet with the dryer.

The dryer must not be installed or stored in an area where it will be exposed to water and/or weather.

The dryer needs sufficient clearance and an adequate air supply for proper operation and ventilation, and for easier installation and servicing. (Minimum clearances are shown in *Figure 3*).

3. Place the dryer in position, and adjust the legs until the dryer is level from side to side and front to back. Leveling legs can be adjusted from inside the dryer with a 1/4 in. driver.
4. All four legs must rest firmly on the floor so the weight of the dryer is evenly distributed. The dryer must not rock.

© Copyright, Alliance Laundry Systems LLC - DO NOT COPY or TRANSMIT

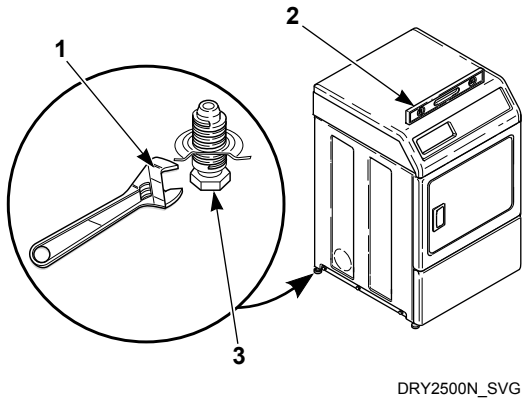

1. Dryer Base
2. Level
3. Leveling Leg

Figure 2

© Copyright, Alliance Laundry Systems LLC -
DO NOT COPY or TRANSMIT

Front View (Without Closet Door)

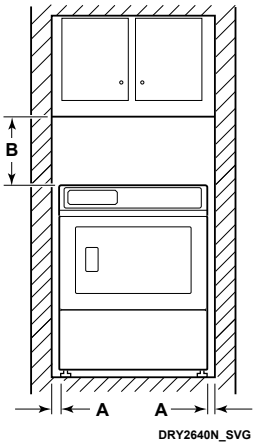

Side View (Closet Door)

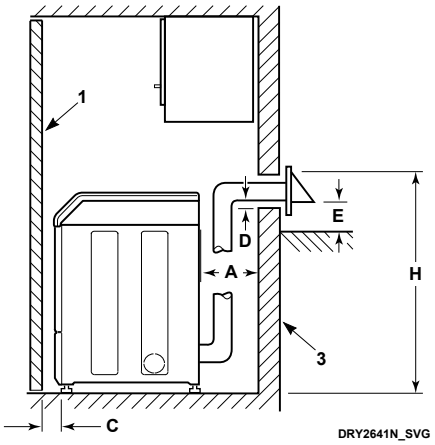

Front View (Closet Door)

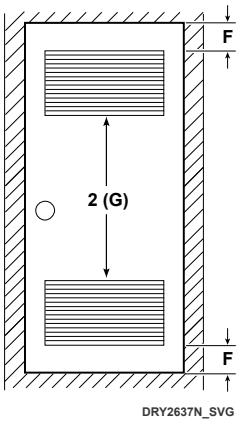

1. Closet Door
2. Centered Air Openings (G) (2 Openings minimum)
3. Outer Wall of Enclosure

Figure 3

© Copyright, Alliance Laundry Systems LLC -
DO NOT COPY or TRANSMIT

Area	Description	Free Standing/Alcove Installation	Closet Installation
A*	Dryer sides and rear clearance	0 in. [0 mm]	0 in. [0 mm]
B	Dryer top clearance	12 in. [305 mm]	12 in. [305 mm]
C	Dryer front clearance	Not Applicable	2 in. [51 mm]
D	Exhaust duct clearance to combustible material	2 in. [51 mm]	2 in. [51 mm]
E	Weather hood to ground clearance	12 in. [305 mm]	12 in. [305 mm]
F	Distance from floor or ceiling to air opening edge	Not Applicable	3 in. [76 mm]
G	Area of centered air openings in closet door. Louvered door with equivalent air openings is acceptable. (Minimum clearances are shown.)	Not Applicable	40 sq. in./open [1016 sq. mm/open]
H	For new installations, it is suggested to locate top of wall vent 42 inches [1067 mm] above floor to make venting easier to connect.	42 in. [1067 mm]	42 in. [1067 mm]
*	Rear clearance is minimum. 2 inches [51 mm] is recommended for utility connection. 6 inches [152 mm] is recommended when venting through rear of unit.		

Table 1

IMPORTANT: In mobile home installations, gas dryers MUST be permanently attached to the floor at the time of installation. Order No. 526P3 Hold Down Kit (available at extra cost) for a manufactured (mobile) home installation. Follow the instructions supplied with the kit.

Installation of unit must conform to the Manufactured Home Construction and Safety Standards, Title 24 CF4, Part 32-80 or Standard CAN/CSA-Z240 MH.

Connect Dryer Exhaust System

WARNING

To reduce the risk of fire and combustion gas accumulation the dryer MUST be exhausted to the outdoors.

W604

WARNING

To reduce the risk of fire and the accumulation of combustion gases, DO NOT exhaust dryer air into a window well, gas vent, chimney or enclosed, unventilated area, such as an attic, wall, ceiling, crawl space under a building or concealed space of a building.

W045

WARNING

This gas appliance contains or produces a chemical or chemicals which can cause death or serious illness and which are known to the State of California to cause cancer, birth defects, or other reproductive harm. To reduce the risk from substances in the fuel or from fuel combustion, make sure this appliance is installed, operated, and maintained according to the instructions in this manual.

W115

© Copyright, Alliance Laundry Systems LLC - DO NOT COPY or TRANSMIT

WARNING

To reduce the risk of fire, DO NOT use plastic or thin foil ducting to exhaust the dryer.

W354

WARNING

To reduce the risk of fire, the exhaust duct and weather hood MUST be fabricated of a material that will not support combustion. Rigid or flexible metal pipe is recommended for a clothes dryer.

W048

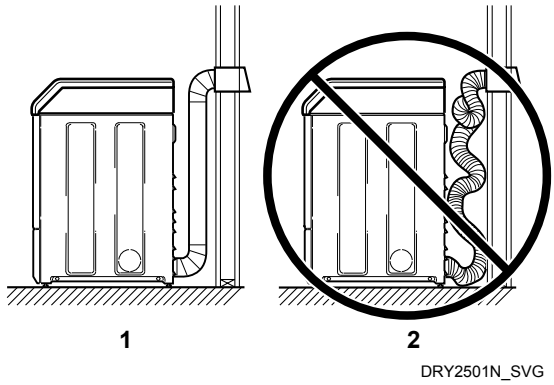

1. Correct
2. Incorrect

Figure 4

- DO NOT use plastic, thin foil or type B ducting. Rigid metal duct is recommended.
- Locate dryer so exhaust duct is as short as possible.
- Be certain old exhaust ducts are cleaned before installing your new dryer.
- Use 4 inch [102 mm] diameter rigid or flexible metal duct.
- The male end of each section of duct must point away from the dryer.
- Use as few elbows as possible.
- Use of duct tape or pop-rivets on all seams and joints is recommended, if allowed by local codes. DO NOT use sheet metal screws or fasteners on exhaust pipe joints which extend into the duct and catch lint.
- Ductwork that runs through unheated areas must be insulated to help reduce condensation and lint build-up on pipe walls.
- In mobile home installations, dryer exhaust duct must be secured to mobile home structure.
- Dryer exhaust duct MUST NOT terminate under mobile home.
- Exhaust duct must not be connected to any other duct, vent, or chimney.
- Dryer exhausts 220 cfm per unit (measured at back of dryer).
- DO NOT install flexible duct in concealed spaces, such as a wall or ceiling.
- Static pressure in exhaust duct should not be greater than 0.6 inches water column [1.5 cm water column], measured with manometer placed on exhaust duct 2 feet [610 mm] from dryer (check with dryer running and no load).
- Exhausting dryer in hard-to-reach locations can be done by installing 521P3 Flexible Metal Vent Kit (available as optional equipment at extra cost).
- Sufficient make-up air must be supplied to replace the air exhausted by the dryer. The free area of any opening for outside air must be at least 40 in.^{2} [25806 mm^2] per unit.
- Failure to exhaust dryer properly will void warranty.
- A dryer will dissipate 60 Btu/ft^2 [681,392 J/m^2] of surface area exposed to the conditioned air.

NOTE: Venting materials are not supplied with the dryer (obtain locally).

IMPORTANT: DO NOT block the airflow at the bottom of the dryer's front panel with laundry, rugs, etc. Blockage will decrease airflow through the dryer, thus reducing the efficiency of the dryer.

Exhaust Direction

The dryer can be exhausted to the outdoors through the back, left, right or bottom of the dryer. EXCEPTION: Gas dryers cannot be vented out the left side because of the burner housing.

Dryer is shipped from factory ready for rear exhaust.

Exhausting the dryer through sides or bottom can be accomplished by installing a Directional Exhaust Kit, 528P3, available as optional equipment at extra cost.

Exhaust System

For best drying results, recommended maximum length of exhaust system is shown in *Table 2* .

To prevent backdraft when dryer is not in operation, outer end of exhaust pipe must have a weather hood with hinged dampers (obtain locally).

NOTE: Weather hood should be installed at least 12 inches [305 mm] above the ground. Larger clearances may be necessary for installations where heavy snowfall can occur.

© Copyright, Alliance Laundry Systems LLC - DO NOT COPY or TRANSMIT

Number of 90° Elbows	Weather Hood Type	
	Recommended	Use Only for Short Run Installations
	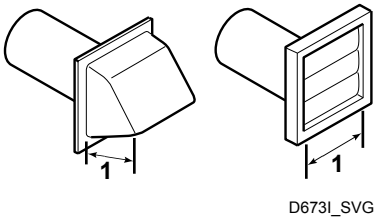 1. 4 in. [102 mm]	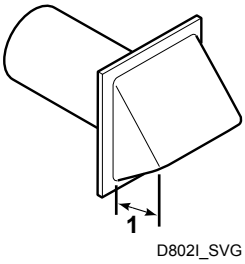 1. 2.5 in. [64 mm]
Maximum length of 4 in. [102 mm] diameter rigid metal duct.		
0	65 feet [19.8 m]	55 feet [16.8 m]
1	55 feet [16.8 m]	47 feet [14.3 m]
2	47 feet [14.3 m]	41 feet [12.5 m]
3	36 feet [11.0 m]	30 feet [9.1 m]
4	28 feet [8.5 m]	22 feet [6.7 m]

Table 2

NOTE: Deduct 6 feet [1.8 m] for each additional elbow.

NOTE: The maximum length of a 4 in. [102 mm] diameter flexible metal duct must not exceed 7.87 ft. [2.4 m], as required to meet UL2158, clause 7.3.2.A.

Gas Dryers - Connect Gas Supply Pipe

WARNING

To reduce the risk of gas leaks, fire or explosion:

- **The dryer must be connected to the type of gas as shown on nameplate located in the door recess.**
- **Use a new flexible stainless steel connector.**
- **Use pipe joint compound insoluble in L.P. (Liquefied Petroleum) Gas, or Teflon tape, on all pipe threads.**
- **Purge air and sediment from gas supply line before connecting it to the dryer. Before tightening the connection, purge remaining air from gas line to dryer until odor of gas is detected. This step is required to prevent gas valve contamination.**
- **Do not use an open flame to check for gas leaks. Use a non-corrosive leak detection fluid.**
- **Any disassembly requiring the use of tools must be performed by a suitably qualified service person.**

W316

© Copyright, Alliance Laundry Systems LLC - DO NOT COPY or TRANSMIT

1. Make certain your dryer is equipped for use with the type of gas in your laundry room. Dryer is equipped at the factory for Natural Gas with a 3/8 inch NPT gas connection.

   NOTE: The gas service to a gas dryer must conform with the local codes and ordinances, or in the absence of local codes and ordinances, with the latest edition of the National Fuel Gas Code ANSI Z223.1/ NFPA 54 or the CAN/CSA-B149.1 Natural Gas and Propane Installation Code.

Natural Gas, 1000 Btu/ft^3 [37.3 MJ/m^3], service must be supplied at minimum 5.0 inch water column pressure to maximum 10.5 inch water column pressure.

For proper operation at altitudes above 3000 feet [915 m] the natural gas valve spud orifice size must be reduced to ensure complete combustion. Refer to *Table 3* .

Natural Gas Altitude Adjustments			
Altitude	**Orifice Size**		**Part No.**
feet [m]	**No.**	**inches [mm]**	
3000 [915]	43	0.0890 [2.26]	D503778
6000 [1830]	44	0.0860 [2.18]	58719
8000 [2440]	45	0.0820 [2.08]	D503779
9000 [2740]	46	0.0810 [2.06]	D503780
10,000 [3050]	47	0.0785 [1.99]	D503781

Table 3

2. Remove the shipping cap from the gas connection at the rear of the dryer. Make sure you do not damage the pipe threads when removing the cap.

   NOTE: If gas supply connection is British Standard Pipe Tapered thread (BSPT), order 44178804 brass female NPT (FPT) to male BSPT gas pipe thread adapter, available at extra cost.

3. Connect to gas supply pipe using thread sealant or Teflon tape. Torque 90 - 175 inch-pounds [10.2 - 19.7 Nm].

   NOTE: The connection of gas supply to the appliance shall be made with a flexible hose suitable for the appliance category in accordance with national installation regulations of the country of destination. If in doubt contact the dryer distributor or manufacturer.

   NOTE: When connecting to a gas line, an equipment shut-off valve in accordance with the National Fuel Gas Code, ANSI Z223.1/NFPA 54 and the Natural Gas and Propane Installation Code, CSA B149.1 must be installed within 6 feet [1.8 m] of the dryer. An 1/8 in. NPT pipe plug must be installed as shown for checking inlet pressure. Refer to *Figure 5* .

Starting Serial No. 1908000001, the following must be furnished and installed by the customer for the gas service line to dryer: Union at gas supply connection (listed to ANSI Z21.24 and CSA 6.10).

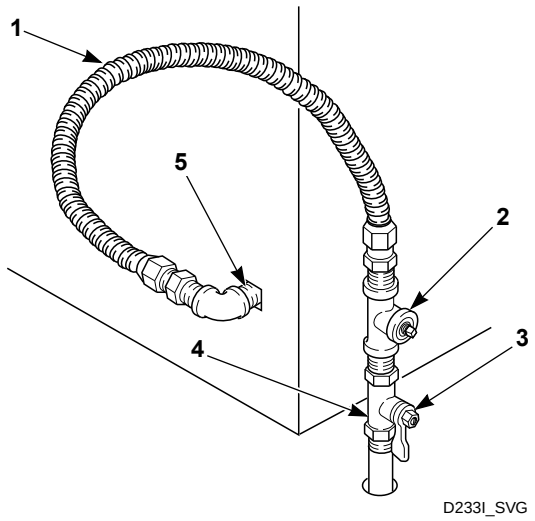

1. New Stainless Steel Flexible Connector – (Use design CSA certified connector) Use only if allowed by local codes
2. 1/8 in. NPT Pipe Plug
3. Equipment Shut-Off Valve
4. Black Iron Pipe:

   Shorter than 20 ft. [6.1 m] – Use 3/8 in. [9.5 mm] pipe.

   Longer than 20 ft. [6.1 m] – Use 1/2 in. [12.7 mm] pipe.
5. 3/8 in. NPT Gas Connection

Figure 5

4. Tighten all connections securely but don't overtighten to avoid breaking or bending the gas valve bracket. Turn on gas and check all pipe connections (internal & external) for gas leaks with a non-corrosive leak detection fluid.

NOTE: The dryer and its appliance main gas valve must be disconnected from the gas supply piping system during any pressure testing of that system at test pressures in excess of 1/2 psi [3.45 kPa]. Refer to *Check Heat Source*.

NOTE: DO NOT connect the dryer to L.P. Gas Service without converting the gas valve. Install L.P. Gas Conversion Kit 649P3, available at extra cost.

© Copyright, Alliance Laundry Systems LLC - DO NOT COPY or TRANSMIT

L.P. (Liquefied Petroleum) Gas, 2500 Btu/ft.^{3} [93.1 MJ/m^3], service must be supplied at 10 ± 1.5 inch water column pressure.

For proper operation at altitudes above 3000 feet [915 m] the L.P. gas valve spud orifice size must be reduced to ensure complete combustion. Refer to *Table 4* .

L.P. Altitude Adjustments			
Altitude	Orifice Size		
feet [m]	No.	inches [mm]	Part No.
3000 [915]	55	0.0520 [1.32]	58755
8000 [2440]	56	0.0465 [1.18]	D503786

Table 4

Electric Dryer Only - Connect Electrical Plug

Dryer requires 120/240 Volt or 120/208 Volt, 60 Hertz, 3 or 4 wire electrical supply. Refer to serial plate for specific electrical requirements.

IMPORTANT: Use only a new U.L. listed No. 10 (copper wire only) three or four conductor power supply cord kit rated 240 Volts (minimum) 30 Amperes and labeled as suitable for use in a clothes dryer.

NOTE: The wiring diagram is located in the control cabinet.

WARNING

To reduce the risk of fire, electric shock, serious injury or death, all wiring and grounding MUST conform with the latest edition of the National Electrical Code, ANSI/NFPA 70, or the Canadian Electrical Code, CSA C22.1, and such local regulations as might apply. It is the customer's responsibility to have the wiring and fuses installed by a qualified electrician to make sure adequate electrical power is available to the dryer.

W521

Earth/Ground Information

This appliance must be properly connected to protective earth/ground. In the event of malfunction or breakdown, the earth/ground will reduce the risk of electric shock by providing a path of least resistance for electric current.

The cord-kit must be equipped with a cord having an equipment-earth/ground conductor and an earth/ground plug. The plug must be plugged into an appropriate outlet that is properly installed and connected to a protective earth/ground in accordance with all local codes and ordinances.

WARNING

Improper connection of the equipment earth/ground conductor can result in a risk of electric shock. Check with a qualified electrician or service person if you are in doubt as to whether the dryer is properly connected to a protective earth/ground.

W886

Do not modify the plug provided with the cord-kit - if it will not fit the outlet, have a proper outlet installed by a qualified electrician.

The dryer has its own terminal block that must be connected to a separate branch, 60 Hertz, single phase circuit, AC (alternating current) circuit, fused at 30 Amperes (the circuit must be fused on both sides of the line). Electrical service for the dryer should be of maximum rated voltage (208 or 240 Volt, depending on heating element) listed on the serial plate. Do not connect dryer to 110, 115, or 120 Volt circuit.

Heating elements are available for field installation in dryers which are to be connected to electrical service of different voltage than that listed on serial plate, such as 208 Volt.

NOTE: Branch circuit wire size requirements to laundry room outlet are shown in table below.

Wire Length	Wire
Less than 15 ft. [4.5 m]	Listed No. 10 AWG Copper wire only
Longer than 15 ft. [4.5 m]	Listed No. 8 AWG Copper wire only

Table 5

The power cord connection between wall receptacle and dryer terminal block IS NOT supplied with dryer. Type of power cord and gauge of wire must conform to local codes.

Connecting Power Cord with Three-Wire Plug

NOTE: Four-wire cord is required for new branch-circuit installations, mobile homes or where codes do not permit grounding through neutral.

NOTE: The power cord is NOT supplied with the electric dryer. Type of power cord and gauge of wire must conform to local codes and instructions. The method of wiring the dryer is optional and subject to local code requirements.

NOTE: Connect the dryer to the power supply with the MAXIMUM RATED VOLTAGE listed on the serial plate.

© Copyright, Alliance Laundry Systems LLC - DO NOT COPY or TRANSMIT

NOTE: Use COPPER WIRE only.

Shorter than 15 ft. (4.5 m) – use 10 AWG

Longer than 15 ft. (4.5 m) – use 8 AWG

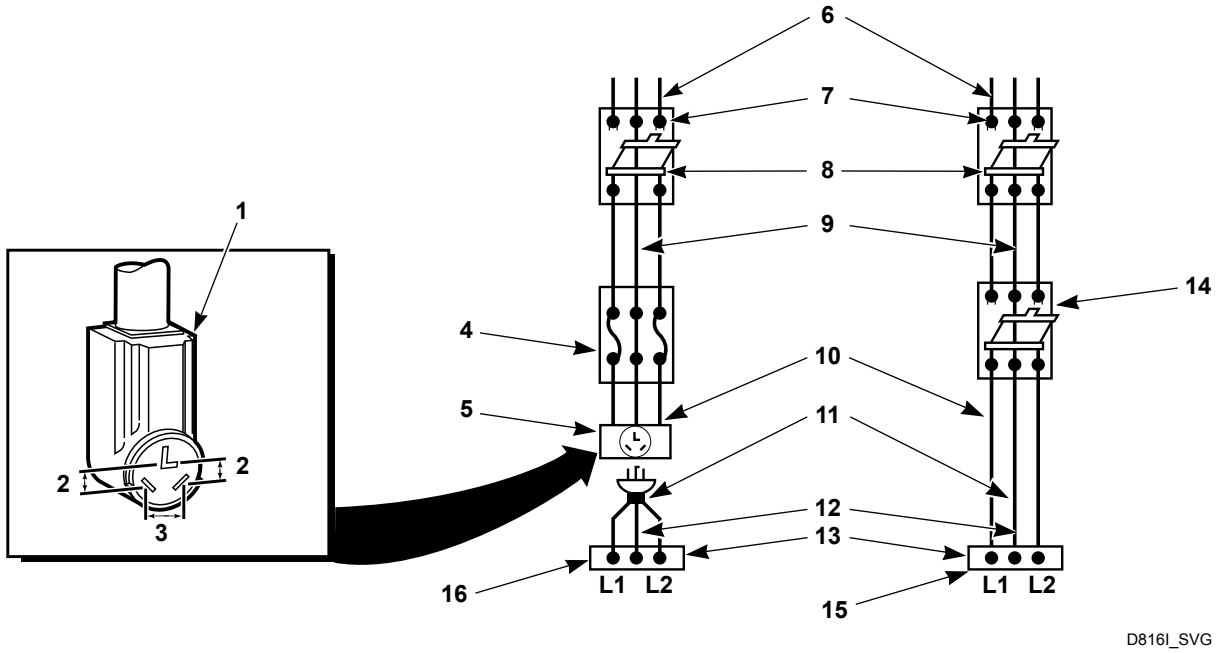

1. A typical 30-Amp Three-Wire Receptacle NEMA Type 10-30R
2. 120 ± 12 V.A.C.
3. 240 ± 12 V.A.C.
4. Intermediate Fuse Box (may be omitted if service entrance box is fused)
5. Wall Receptacle
6. Power Supply
7. 3-Wire Earth/Ground Neutral 120/240 Volt, 60 Hertz AC 1 Phase Service Entrance Switch Box (Refer to NOTE above)
8. 30 Ampere Fuses or Circuit Breaker
9. Neutral Wire
10. Metallic or Non-Metallic Sheathed Cable (Copper Wire Only)
11. Power Cord (Not supplied with dryer)
12. Neutral
13. Terminal Block in Dryer
14. Intermediate Shut-Off Box (may or may not be fused)
15. Direct Connection
16. Power Cord Connection

Figure 6

1. Disconnect power to dryer.
2. Remove access cover from rear of dryer.

© Copyright, Alliance Laundry Systems LLC -
DO NOT COPY or TRANSMIT

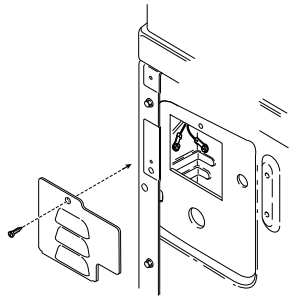

Figure 7

3. Use a strain relief and insert end of power cord through power supply hole.

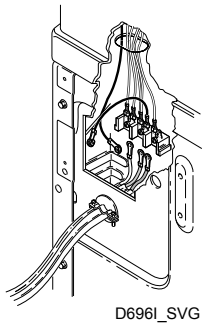

Figure 8

4. Use the three screws from the accessories bag to attach the power cord wires to the terminal block. Refer to *Figure 9* .

3-Wire Connection

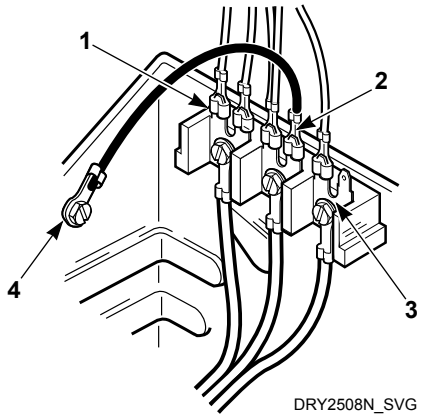

1. "L1" Terminal
2. Neutral Terminal
3. "L2" Terminal
4. Earth/Ground to Bulkhead

Figure 9

5. Using a screwdriver, tighten all screws firmly.

   IMPORTANT: Failure to tighten these screws firmly may result in wire failure at the terminal block.

6. Secure the strain relief to the power cord, or wires, where they enter the dryer cabinet.
7. Check the continuity of the earth/ground connection before plugging the cord into an outlet. Use an acceptable indicating device connected to the center earth/ground pin of the plug and the green screw on the back of the cabinet.
8. Reinstall access cover and screw.

Connecting Power Cord with Four-Wire Plug

NOTE: Four-wire cord is required for new branch-circuit installations, mobile homes or where codes do not permit grounding through neutral.

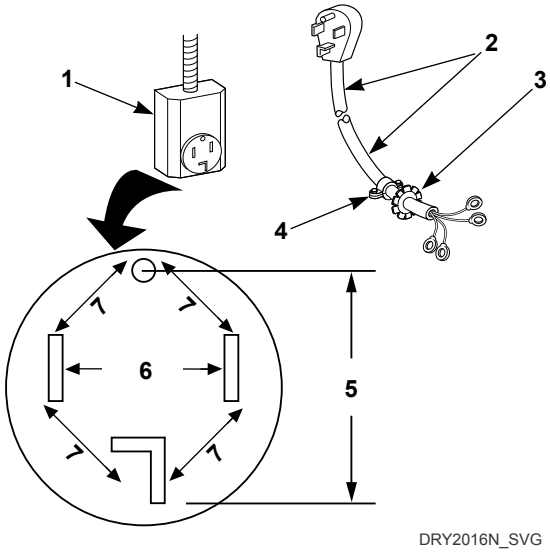

1. Typical Four-Wire Receptacle
2. Power Cord – Not Supplied with Dryer
3. Strain Relief Nut
4. Strain Relief
5. 0 V.A.C.
6. 240 ± 12 V.A.C.
7. 120 ± 12 V.A.C.

Figure 10

1. Disconnect power to dryer.
2. Remove access cover from rear of dryer.

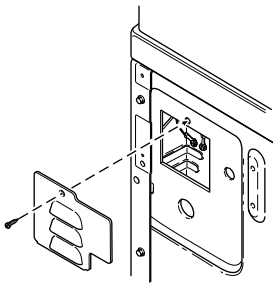

Figure 11

© Copyright, Alliance Laundry Systems LLC - DO NOT COPY or TRANSMIT

3. Remove earth/ground screw from earth/ground to neutral wire and save for use in Step 5. Earth/ground to neutral wire will be attached to the neutral terminal in Step 6.

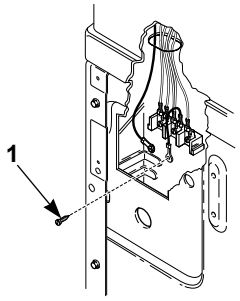

DRY2468N_SVG

1. Earth/Ground Screw

Figure 12

4. Use a strain relief and insert end of power cord through power supply hole.

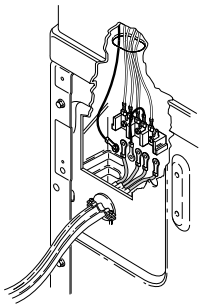

DRY2469N_SVG

1. Strain Relief

Figure 13

5. Attach power cord earth/ground (green) wire to rear bulkhead using earth/ground screw removed in Step 3.

4-Wire Connection

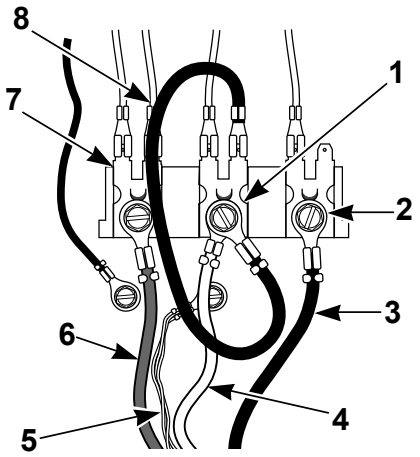

DRY2482N_SVG

1. Neutral Terminal
2. “L2” Terminal
3. Black
4. White
5. Earth/Ground
6. Red
7. “L1” Terminal
8. Earth/Ground to Neutral Wire

Figure 14

6. Use the three screws from the accessories bag to attach the remaining power cord wires to the terminal block as follows:
   a. Red wire to “L1” terminal.
   b. Black wire to “L2” terminal.
   c. White wire to Neutral terminal.

   NOTE: When installing the white wire, loop the free eyelet end of the earth/ground to neutral wire (removed in Step 3) and attach along with the white wire to the neutral (center) terminal on the terminal block.
7. Using a screwdriver, tighten all screws firmly.

   IMPORTANT: Failure to tighten these screws firmly may result in wire failure at the terminal block.
8. Secure the strain relief to the power cord, or wires, where they enter the dryer cabinet.
9. Check the continuity of the earth/ground connection before plugging the cord into an outlet. Use an acceptable indicating device connected to the center earth/ground pin of the plug and the green screw on the back of the cabinet.
10. Reinstall access cover and screw.

Reverse Door, if Desired

NOTE: Doors with windows cannot be reversed.

© Copyright, Alliance Laundry Systems LLC - DO NOT COPY or TRANSMIT

The door on this dryer is completely reversible. To reverse door proceed as follows:

1. Remove four hinge attaching screws.

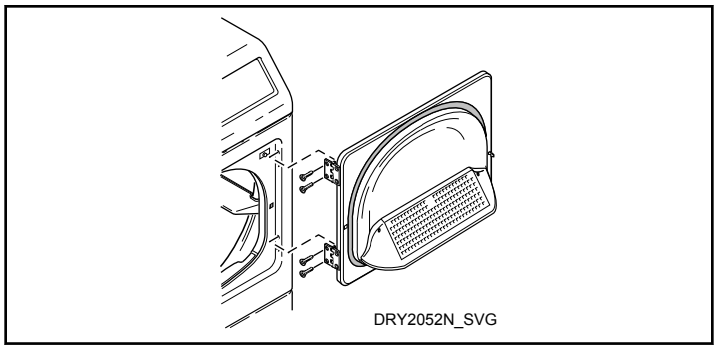

Figure 15

2. Remove all nine screws.

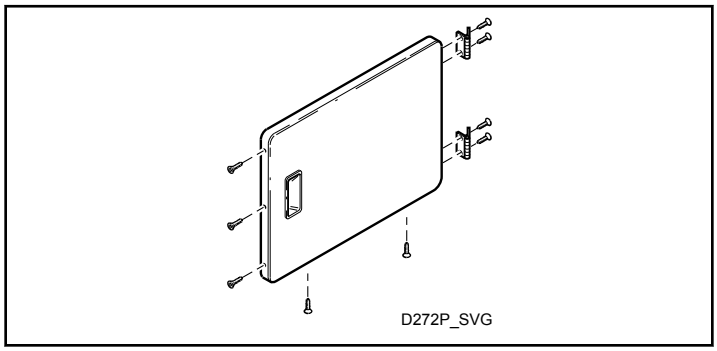

Figure 16

3. Pull bottom of door liner out, then pull down, removing door liner from door panel.

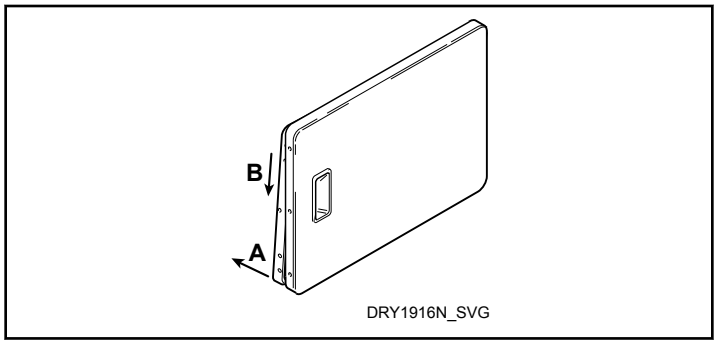

Figure 17

4. Rotate door panel 180 degrees as shown.

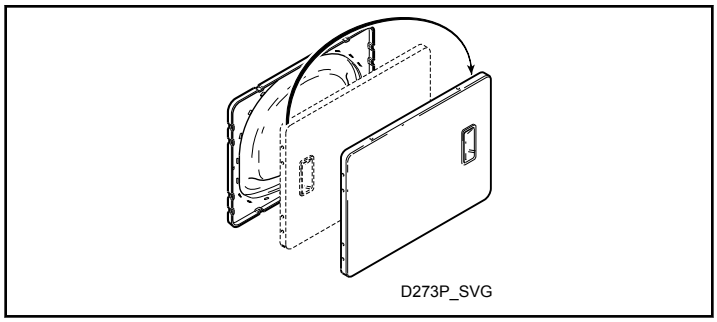

Figure 18

5. Remove door strike from door liner and reinstall on opposite side.

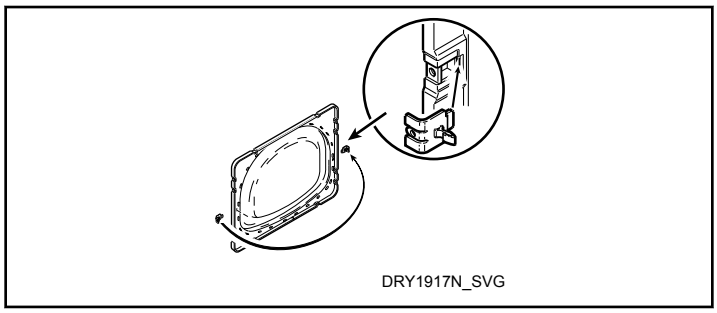

Figure 19

6. Insert liner under flange on bottom of door, then push top of door liner into place.

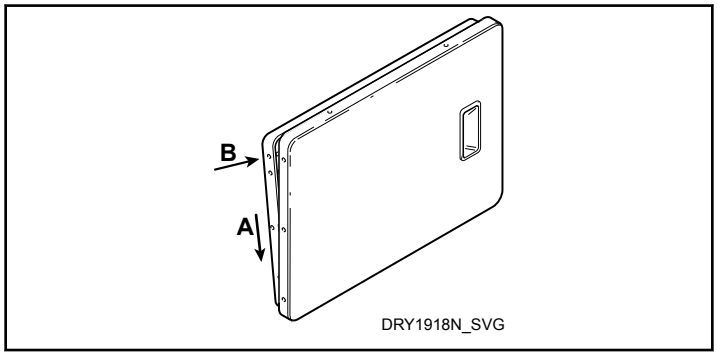

Figure 20

7. Reinstall nine screws removed in Step 2.

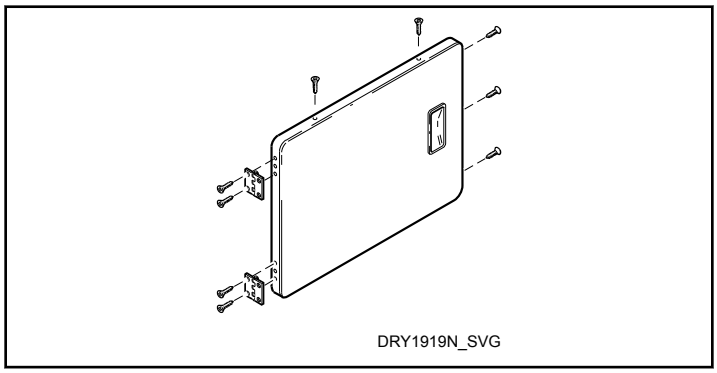

Figure 21

© Copyright, Alliance Laundry Systems LLC -
DO NOT COPY or TRANSMIT

8. Using screwdriver, remove two door plugs, and reinstall on opposite side of door opening.

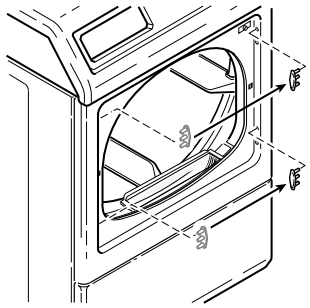

Figure 22

9. Reinstall four hinge attaching screws, removed in Step 1.

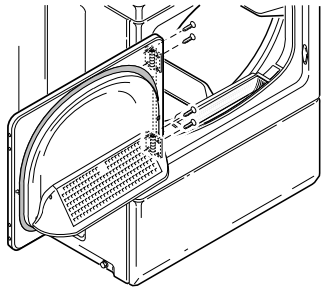

Figure 23

Wipe Out Inside of Dryer

Before using dryer for the first time, use an all-purpose cleaner, or a detergent and water solution, and a damp cloth to remove shipping dust from inside dryer drum.

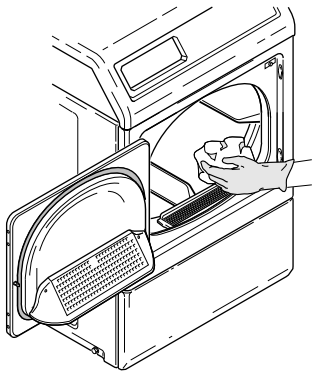

Figure 24

Plug In the Dryer

This appliance is to be supplied through a residual current device (RCD) having a rated residual operating current not exceeding 30 mA.

WARNING

The appliance must not be supplied through an external switching device, such as a timer, or connected to a circuit that is regularly switched on and off by a utility.

W943

Electric Dryer

Connect the dryer to an electrical power source. Refer to Connect Electrical Plug section for information on connecting power cord.

Connect to 30 Amp Circuit

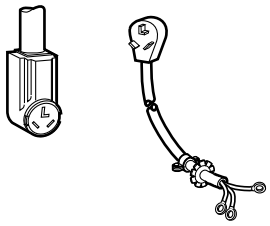

Figure 25

Gas Dryer

Dryer requires 120 Volt, 60 Hertz electrical supply and comes equipped with a 3-prong earth/ground plug. Refer to serial plate for specific electrical requirements.

NOTE: The wiring diagram is located in the control cabinet.

WARNING

To reduce the risk of fire, electric shock, serious injury or death, all wiring and grounding MUST conform with the latest edition of the National Electrical Code, ANSI/NFPA 70, or the Canadian Electrical Code, CSA C22.1, and such local regulations as might apply. It is the customer's responsibility to have the wiring and fuses installed by a qualified electrician to make sure adequate electrical power is available to the dryer.

W521

When plugging in the dryer:

- DO NOT overload circuits.
- DO NOT use an extension cord.
- DO NOT use an adapter.
- DO NOT operate other appliances on the same circuit. Use separately fused 15 Amp circuits.

© Copyright, Alliance Laundry Systems LLC - DO NOT COPY or TRANSMIT

The dryer is designed to be operated on a separate branch, polarized, three-wire, effective earth/ground, 120 Volt, 60 Hertz, AC (alternating current) circuit protected by a 15 Ampere fuse, equivalent fusetron or circuit breaker.

The three-prong earth/ground plug on the power cord should be plugged directly into a polarized three-slot effective earth/ground receptacle rated 120 Volts AC (alternating current) 15 Amps. Refer to *Figure 26* to determine correct polarity of the wall receptacle.

Plug Cord Into Separately Fused 15 Amp Circuit

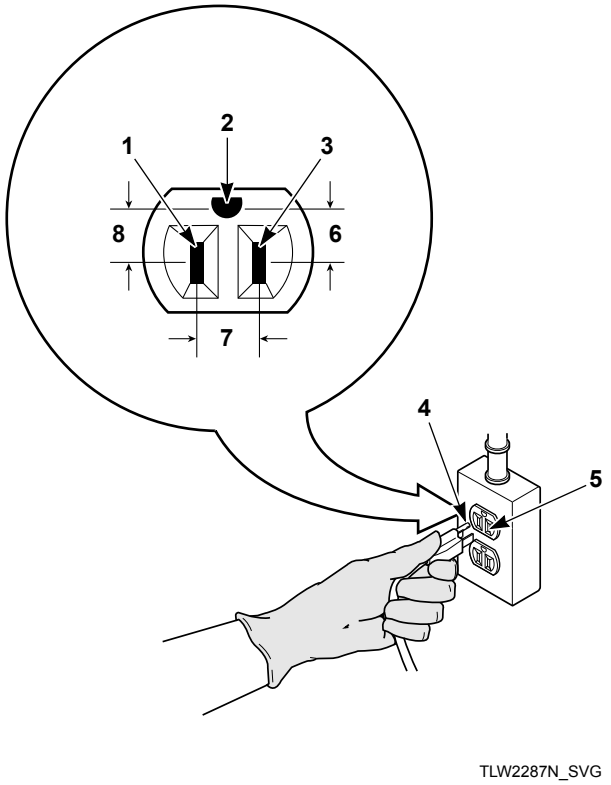

1. L1
2. Earth/Ground
3. Neutral
4. Round Earth/Ground Plug
5. Neutral Side
6. 0 V.A.C.
7. 120 ± 12 V.A.C.
8. 120 ± 12 V.A.C.

Figure 26

Earth/Ground Information

This appliance must be properly connected to protective earth/ground. In the event of malfunction or breakdown, the earth/ground will reduce the risk of electric shock by providing a path of least resistance for electric current.

The dryer is equipped with a cord having an equipment earth/ground conductor and a three-prong earth/ground plug. The three-prong earth/ground plug on the power cord should be plugged directly into a polarized three-slot effective earth/ground receptacle rated 110/120 Volts AC (alternating current) 15 Amps.

WARNING

This unit is equipped with a three-prong (earth/ground) plug for your protection against shock hazard and should be plugged directly into a protective earth/ ground three-prong receptacle. Do not cut or remove the earth/ground prong from this plug.

W823

WARNING

Improper connection of the equipment earth/ground conductor can result in a risk of electric shock. Check with a qualified electrician or service person if you are in doubt as to whether the dryer is properly connected to a protective earth/ground.

W886

Do not modify the plug provided with the dryer – if it will not fit the outlet, have a proper outlet installed by a qualified electrician.

NOTE: Have a qualified electrician check the polarity of the wall receptacle. If a voltage reading is measured other than that illustrated, the qualified electrician should correct the problem.

Do not operate other appliances on the same circuit.

WARNING

To reduce the risk of an electric shock or fire, DO NOT use an extension cord or an adapter to connect the dryer to the electrical power source.

W037

Recheck Steps

Refer to Installer Checklist on the back cover of this manual and make sure that dryer is installed correctly.

Check Heat Source

Electric Dryers

1. Close the loading door and start the dryer in a heat setting (refer to the operation instructions).
2. After the dryer has operated for three minutes, the exhaust air or exhaust pipe should be warm.

Gas Dryers

© Copyright, Alliance Laundry Systems LLC - DO NOT COPY or TRANSMIT

IMPORTANT: This operation is to be conducted by qualified personnel only.

1. To view the burner flame, remove the lower front panel of the dryer.
2. Close the loading door and start the dryer in a heat setting (refer to the operation instructions). The dryer will start, the igniter will glow red and the main burner will ignite.

   IMPORTANT: If all air is not purged out of gas line, gas igniter may go off before gas is ignited. If this happens, after approximately two minutes igniter will again attempt gas ignition.

   IMPORTANT: If igniter does not light, make sure gas is turned on.
3. After the dryer has operated for approximately five minutes, observe burner flame through lower front panel.
4. Adjust the air shutter to obtain a soft, uniform blue flame. (A lazy, yellow-tipped flame indicates lack of air. A harsh, roaring, very blue flame indicates too much air.) Adjust the air shutter as follows:
   a. Loosen the air shutter lockscrew.
   b. Turn the air shutter to the left to get a luminous yellow-tipped flame, then turn it back slowly to the right to obtain a steady, soft blue flame.
   c. After the air shutter is adjusted for proper flame, tighten the air shutter lockscrew securely.
5. Reinstall the lower front panel.

WARNING

To reduce the risk of serious injury or death, lower front panel must be in place during normal operation.

W158

6. After the dryer has operated for approximately three minutes, exhaust air or exhaust pipe should be warm.

Shut-off Valve Only Applicable on Certain Models

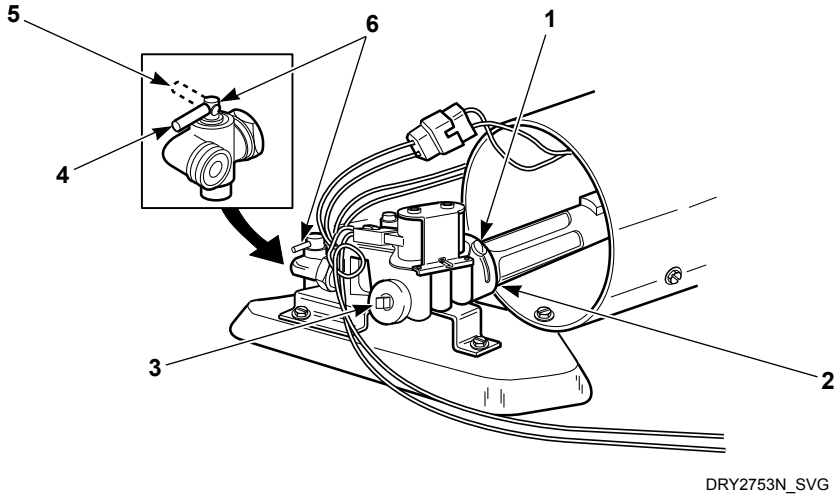

1. Air Shutter Lockscrew
2. Air Shutter
3. 1/8 in. [3.1 mm] Pipe Plug (For checking manifold pressure)
4. Shut-off Valve Open Position
5. Shut-off Valve Closed Position
6. Shut-off Valve Handle

Figure 27

© Copyright, Alliance Laundry Systems LLC - DO NOT COPY or TRANSMIT

Installer Checklist

Fast Track for Installing the Dryer

1	Position and Level the Dryer.	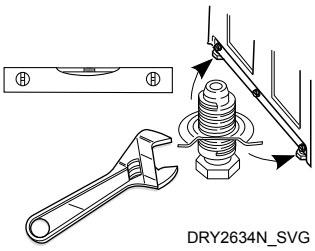 DRY2634N_SVG	5	Reverse Door, if Desired.	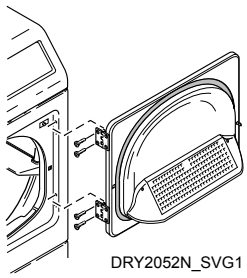 DRY2052N_SVG1
	CHECK			CHECK	
2	Connect Dryer Exhaust System.	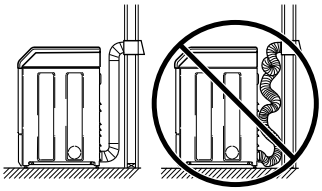 DRY2501N_SVG1	6	Wipe Out Inside of Dryer.	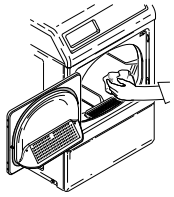 DRY2504N_SVG1
	CHECK			CHECK	
3	GAS ONLY • Connect Gas Supply Pipe. • Check for Gas Leaks.	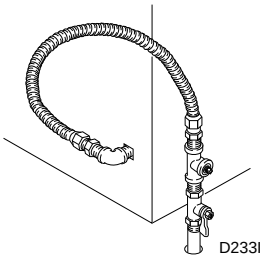 D233I_SVG1	7	Plug In the Dryer.	Electric 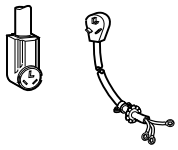 D275I_SVG1 Gas 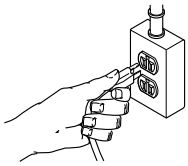 D254I_SVG
	CHECK			CHECK	
4	ELECTRIC ONLY Connect Electrical Cord.	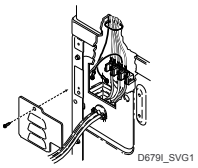 D679I_SVG1	8	Recheck Steps.	
	CHECK			CHECK	
			9	Start and Run Dryer in Heat Setting to Verify Dryer is Heating.	
				CHECK	

Refer to the manual for more detailed information

© Copyright, Alliance Laundry Systems LLC - DO NOT COPY or TRANSMIT